LM4120 Precision Micropower Low Dropout Voltage Reference

1 Features

- Small SOT23-5 Package
- Low Dropout Voltage: 120 mV Typical at 1 mA
- High Output Voltage Accuracy: 0.2%
- Source and Sink Current Output: ±5 mA
- Supply Current: 160 µA Typical
- Low Temperature Coefficient: 50 ppm/°C
- Enable Pin
- Fixed Output Voltages: 1.8, 2.048, 2.5, 3, 3.3, 4.096, and 5 V
- Industrial Temperature Range: −40°C to 85°C
- (For Extended Temperature Range, −40°C to 125°C, Contact TI)

2 Applications

- Portable, Battery-Powered Equipment
- Instrumentation and Process Control
- Automotive and Industrial
- Test Equipment
- Data Acquisition Systems
- Precision Regulators
- Battery Chargers
- Base Stations
- Communications
- Medical Equipment

3 Description

The LM4120 device is a precision low-power, low dropout bandgap voltage reference with up to 5-mA output current source and sink capability.

This series reference operates with input voltages as low as 2 V and up to 12 V, consuming 160-µA (typical) supply current. In power-down mode, device current drops to less than 2 µA.

The LM4120 comes in two grades (A and Standard) and seven voltage options for greater flexibility. The best grade devices (A) have an initial accuracy of 0.2%, while the standard have an initial accuracy of 0.5%, both with a temperature coefficient of 50 ppm/°C ensured from −40°C to 125°C.

The very low dropout voltage, low supply current, and power-down capability of the LM4120 make this product an ideal choice for battery-powered and portable applications.

The device performance is ensured over the industrial temperature range (−40°C to 85°C), while certain specifications are ensured over the extended temperature range (−40°C to 125°C). Contact TI for full specifications over the extended temperature range. The LM4120 is available in a standard 5-pin SOT-23 package.

Device Information(1)

PART NUMBER	PACKAGE	BODY SIZE (NOM)
LM4120	SOT-23 (5)	1.60 mm × 2.90 mm

(1) For all available packages, see the orderable addendum at the end of the data sheet.

Functional Block Diagram

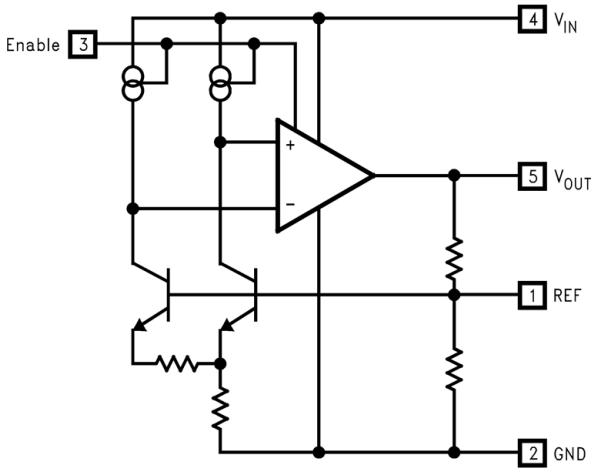

An IMPORTANT NOTICE at the end of this data sheet addresses availability, warranty, changes, use in safety-critical applications, intellectual property matters and other important disclaimers. PRODUCTION DATA.

Table of Contents

1 Features ... 1
2 Applications ... 1
3 Description ... 1
4 Revision History ... 2
5 Pin Configuration and Functions ... 3
6 Specifications ... 3
6.1 Absolute Maximum Ratings ... 3
6.2 ESD Ratings ... 3
6.3 Recommended Operating Conditions ... 4
6.4 Thermal Information ... 4
6.5 Electrical Characteristics ... 4
6.6 Typical Characteristics ... 7
7 Detailed Description ... 10
7.1 Overview ... 10
7.2 Functional Block Diagram ... 10
7.3 Feature Description ... 10
7.4 Device Functional Modes ... 10
8 Application and Implementation ... 11
8.1 Application Information ... 11
8.2 Typical Application ... 14
9 Power Supply Recommendations ... 15
10 Layout ... 16
10.1 Layout Guidelines ... 16
10.2 Layout Example ... 16
11 Device and Documentation Support ... 17
11.1 Community Resources ... 17
11.2 Trademarks ... 17
11.3 Electrostatic Discharge Caution ... 17
11.4 Glossary ... 17
12 Mechanical, Packaging, and Orderable Information ... 17

4 Revision History

NOTE: Page numbers for previous revisions may differ from page numbers in the current version.

Changes from Revision E (February 2016) to Revision F	Page
• Added updated *Layout Example*	16

Changes from Revision D (July 2015) to Revision E	Page
• Added updated *Layout Example*	16

Changes from Revision C (April 2013) to Revision D	Page
• Added *ESD Ratings* table, *Feature Description* section, *Device Functional Modes*, *Application and Implementation* section, *Power Supply Recommendations* section, *Layout* section, *Device and Documentation Support* section, and *Mechanical, Packaging, and Orderable Information* section.	1

Changes from Revision B (April 2013) to Revision C	Page
• Changed layout of National Data Sheet to TI format	14

Copyright © 2000–2016, Texas Instruments Incorporated

5 Pin Configuration and Functions

DBV Package
5-Pin SOT-23
Top View

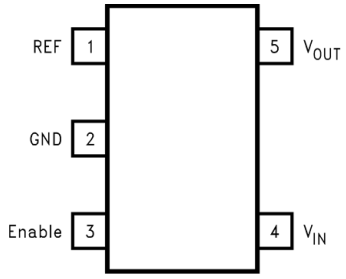

Pin Functions

PIN		I/O	DESCRIPTION
NAME	NO.		
Enable	3	I	Pulled to input for normal operation. Forcing this pin to ground will turn off the output.
GND	2	—	Negative supply or ground connection
REF	1	—	REF pin. This pin must be left unconnected.
V_{IN}	4	I	Positive supply
V_{OUT}	5	O	Reference output

6 Specifications

6.1 Absolute Maximum Ratings

over operating free-air temperature range (unless otherwise noted) (1)

		MIN	MAX	UNIT
Maximum voltage on input or enable pins		–0.3	14	V
Output short-circuit duraion			Indefinite	
Power dissipation (T_A = 25°C) (2)			350	mW
Lead temperature	Soldering, (10 sec.)		260	°C
	Vapor Phase (60 sec.)		215	°C
	Infrared (15 sec.)		220	°C
Storage temperature, T_{stg}		–65	150	°C

(1) Stresses beyond those listed under *Absolute Maximum Ratings* may cause permanent damage to the device. These are stress ratings only, which do not imply functional operation of the device at these or any other conditions beyond those indicated under *Recommended Operating Conditions*. Exposure to absolute-maximum-rated conditions for extended periods may affect device reliability.
(2) Without PCB copper enhancements. The maximum power dissipation must be derated at elevated temperatures and is limited by T_{JMAX} (maximum junction temperature), $R_{\theta JA}$ (junction-to-ambient thermal resistance) and T_A (ambient temperature). The maximum power dissipation at any temperature is: $PDiss_{MAX} = (T_{JMAX} – T_A) / R_{\theta JA}$ up to the value listed in the *Absolute Maximum Ratings*.

6.2 ESD Ratings

		VALUE	UNIT
$V_{(ESD)}$ Electrostatic discharge	Human body model (HBM), per ANSI/ESDA/JEDEC JS-001 (1)	±2000	V
	Charged device model (CDM), per JEDEC specification JESD22-C101 (2)	±750	
	Machine Model	±200	

(1) JEDEC document JEP155 states that 500-V HBM allows safe manufacturing with a standard ESD control process.
(2) JEDEC document JEP157 states that 250-V CDM allows safe manufacturing with a standard ESD control process.

6.3 Recommended Operating Conditions

over operating free-air temperature range (unless otherwise noted)

	MIN	NOM	MAX	UNIT
Ambient temperature	–40		85	°C
Junction temperature	–40		125	°C

6.4 Thermal Information

THERMAL METRIC[1]		LM4120 DBV [SOT-23] 5 PINS	UNIT
$R_{\theta JA}$	Junction-to-ambient thermal resistance	170.4	°C/W
$R_{\theta JC(top)}$	Junction-to-case (top) thermal resistance	123.9	°C/W
$R_{\theta JB}$	Junction-to-board thermal resistance	30.4	°C/W
ψ_{JT}	Junction-to-top characterization parameter	17.2	°C/W
ψ_{JB}	Junction-to-board characterization parameter	29.9	°C/W

(1) For more information about traditional and new thermal metrics, see the *Semiconductor and IC Package Thermal Metrics* application report, SPRA953.

6.5 Electrical Characteristics

unless otherwise specified, V_{IN} = 3.3 V, I_{LOAD} = 0, C_{OUT} = 0.01 µF, $T_A = T_j$ = 25°C.

PARAMETER		TEST CONDITIONS		MIN [1]	TYP [2]	MAX [1]	UNIT
1.8 V, 2.048 V, AND 2.5 V							
V_{OUT}	Output voltage initial accuracy LM4120A-1.800 LM4120A-2.048 LM4120A-2.500					±0.2%	
	LM4120-1.800 LM4120-2.048 LM4120-2.500					±0.5%	
TCV_{OUT}/°C	Temperature coefficient	–40°C ≤ T_A ≤ +125°C			14	50	ppm/°c
$\Delta V_{OUT}/\Delta V_{IN}$	Line regulation	3.3 V ≤ V_{IN} ≤ 12 V			0.0007	0.008	%/V
			–40°C ≤ T_A ≤ 85°C			0.01	
$\Delta V_{OUT}/\Delta I_{LOAD}$	Load regulation	0 mA ≤ I_{LOAD} ≤ 1 mA			0.03	0.08	%/mA
			–40°C ≤ T_A ≤ 85°C			0.17	
		1 mA ≤ I_{LOAD} ≤ 5 mA			0.01	0.04	
			–40°C ≤ T_A ≤ 85°C			0.1	
		–1 mA ≤ I_{LOAD} ≤ 0 mA			0.04	0.12	
		–5 mA ≤ I_{LOAD} ≤ −1 mA			0.01		
$V_{IN}-V_{OUT}$	Dropout voltage [3]	I_{LOAD} = 0 mA			45	65	mV
			–40°C ≤ T_A ≤ 85°C			80	
		I_{LOAD} = 1 mA			120	150	
			–40°C ≤ T_A ≤ 85°C			180	
		I_{LOAD} = 5 mA			180	210	
			–40°C ≤ T_A ≤ 85°C			250	

(1) Limits are 100% production tested at 25°C. Limits over the operating temperature range are ensured through correlation using Statistical Quality Control (SQC) methods. The limits are used to calculate TI's Averaging Outgoing Quality Level (AOQL).
(2) Typical numbers are at 25°C and represent the most likely parametric norm.
(3) Dropout voltage is the differential voltage between V_{OUT} and V_{IN} at which V_{OUT} changes ≤ 1% from V_{OUT} at V_{IN} = 3.3 V for 1.8 V, 2 V, 2.5 V, and V_{OUT} + 1 V for others. For 1.8-V option, dropout voltage is not ensured over temperature. A parasitic diode exists between input and output pins; it will conduct if V_{OUT} is pulled to a higher voltage than V_{IN}.

Copyright © 2000–2016, Texas Instruments Incorporated

Electrical Characteristics (continued)

unless otherwise specified, V_{IN} = 3.3 V, I_{LOAD} = 0, C_{OUT} = 0.01 µF, T_A = T_j = 25°C.

PARAMETER		TEST CONDITIONS		MIN (1)	TYP (2)	MAX (1)	UNIT
V_N	Output(4)	0.1 Hz to 10 Hz			20		μV_{PP}
		10 Hz to 10 kHz			36		
I_S	Supply current				160	250	µA
			–40°C ≤ T_A ≤ 85°C			275	
I_{SS}	Power-down supply current	Enable = 0.4 V –40°C ≤ T_J ≤ 85°C Enable = 0.2 V				1	µA
			–40°C ≤ T_A ≤ 85°C			2	
V_H	Logic high input voltage				2.4		V
		–40°C ≤ T_A ≤ 85°C		2.4			
V_L	Logic low input voltage				0.4		V
		–40°C ≤ T_A ≤ 85°C				0.2	
I_H	Logic high input current				7		µA
		–40°C ≤ T_A ≤ 85°C				15	
I_L	Logic low input current				0.1		µA
I_{SC}	Short circuit current	V_{IN} = 3.3 V, V_{OUT} = 0			15		mA
			–40°C ≤ T_A ≤ 85°C	6		30	
		V_{IN} = 12 V, V_{OUT} = 0			17		
			–40°C ≤ T_A ≤ 85°C	6		30	
Hyst	Thermal hysteresis (5)	–40°C ≤ T_A ≤ 125°C			0.5		mV/V
ΔV_{OUT}	Long term stability (6)	1000 hrs @ 25°C			100		ppm
3 V, 3.3 V, 4.096 V, AND 5 V							
V_{OUT}	Output voltage initial accuracy LM4120A-3.000 LM4120A-3.300 LM4120A-4.096 LM4120A-5.000					±0.2%	
	LM4120-3.000 LM4120-3.300 LM4120-4.096 LM4120-5.000					±0.5%	
TCV_{OUT}/°C	Temperature coefficient	–40°C ≤ T_A ≤ 125°C			14	50	ppm/°c
$\Delta V_{OUT}/\Delta V_{IN}$	Line regulation	(V_{OUT} + 1 V) ≤ V_{IN} ≤ 12 V			0.0007	0.008	%/V
			–40°C ≤ T_A ≤ 85°C			0.01	
$\Delta V_{OUT}/\Delta I_{LOAD}$	Load regulation	0 mA ≤ I_{LOAD} ≤ 1 mA			0.03	0.08	%/mA
			–40°C ≤ T_A ≤ 85°C			0.17	
		1 mA ≤ I_{LOAD} ≤ 5 mA			0.01	0.04	
			–40°C ≤ T_A ≤ 85°C			0.1	
		–1 mA ≤ I_{LOAD} ≤ 0 mA			0.04	0.12	
		–5 mA ≤ I_{LOAD} ≤ –1 mA			0.01		
$V_{IN}-V_{OUT}$	Dropout voltage (3)	I_{LOAD} = 0 mA			45	65	mV
			–40°C ≤ T_A ≤ 85°C			80	
		I_{LOAD} = 1 mA			120	150	
			–40°C ≤ T_A ≤ 85°C			180	
		I_{LOAD} = 5 mA			180	210	
			–40°C ≤ T_A ≤ 85°C			250	

(4) Output noise voltage is proportional to V_{OUT}. V_N for other voltage option is calculated using (V_N(1.8 V) / 1.8) × V_{OUT}.
V_N (2.5 V) = (36 μV_{PP} / 1.8) × 2.5 = 46 μV_{PP}.
(5) Thermal hysteresis is defined as the change in 25°C output voltage before and after exposing the device to temperature extremes.
(6) Long term stability is change in V_{REF} at 25°C measured continuously during 1000 hours.

Copyright © 2000–2016, Texas Instruments Incorporated

Electrical Characteristics (continued)

unless otherwise specified, V_{IN} = 3.3 V, I_{LOAD} = 0, C_{OUT} = 0.01 µF, T_A = T_j = 25°C.

PARAMETER		TEST CONDITIONS		MIN (1)	TYP (2)	MAX (1)	UNIT
3 V, 3.3 V, 4.096 V, AND 5 V (continued)							
V_N	Output noise voltage (4)	0.1 Hz to 10 Hz			20		μV_{PP}
		10 Hz to 10 kHz			36		
I_S	Supply current				160	250	µA
		–40°C ≤ T_A ≤ 85°C				275	
I_{SS}	Power-down supply current	Enable = 0.4 V –40°C ≤ T_J ≤ 85°C Enable = 0.2 V				1	µA
			–40°C ≤ T_A ≤ 85°C			2	
V_H	Logic high input voltage				2.4		V
		–40°C ≤ T_A ≤ 85°C		2.4			
V_L	Logic low input voltage				0.4		V
		–40°C ≤ T_A ≤ 85°C				0.2	
I_H	Logic high input current				7		µA
		–40°C ≤ T_A ≤ 85°C				15	
I_L	Logic low input current				0.1		µA
I_{SC}	Short circuit current	V_{OUT} = 0			15		mA
			–40°C ≤ T_A ≤ 85°C	6		30	
		V_{IN} = 12 V, V_{OUT} = 0			17		
			–40°C ≤ T_A ≤ 85°C	6		30	
Hyst	Thermal hysteresis (5)	–40°C ≤ T_A ≤ 125°C			0.5		mV/V
ΔV_{OUT}	Long term stability (6)	1000 hours @ 25°C			100		ppm

Copyright © 2000–2016, Texas Instruments Incorporated

6.6 Typical Characteristics

unless otherwise specified, V_{IN} = 3.3 V, V_{OUT} = 2.5 V, I_{LOAD} = 0, C_{OUT} = 0.022 µF, T_A = 25°C, and V_{EN} = V_{IN}

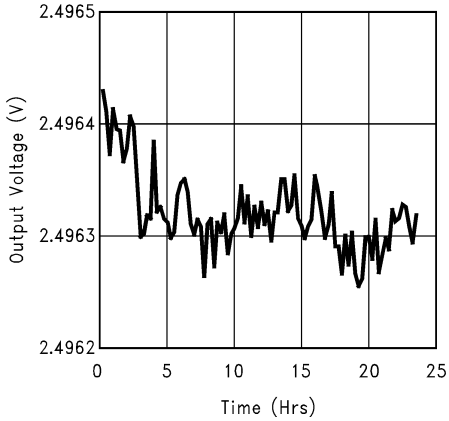

Figure 1. Long Term Drift

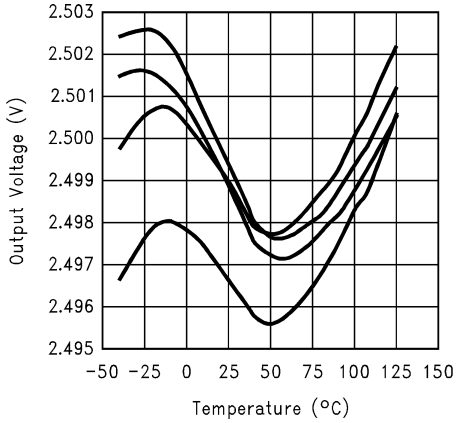

Figure 2. Typical Temperature Drift

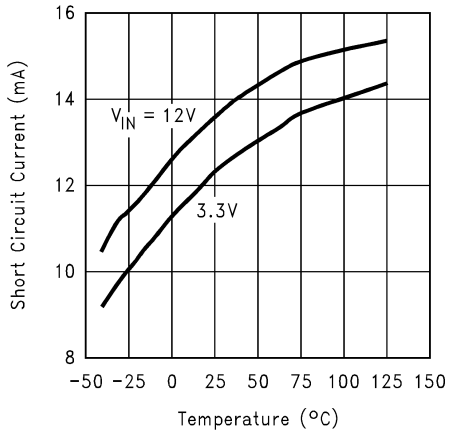

Figure 3. Short Circuit Current vs Temperature

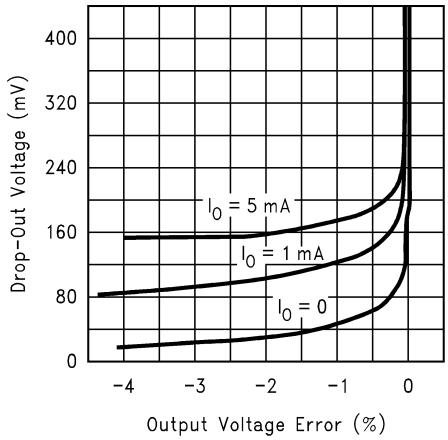

Figure 4. Dropout Voltage vs Output Error

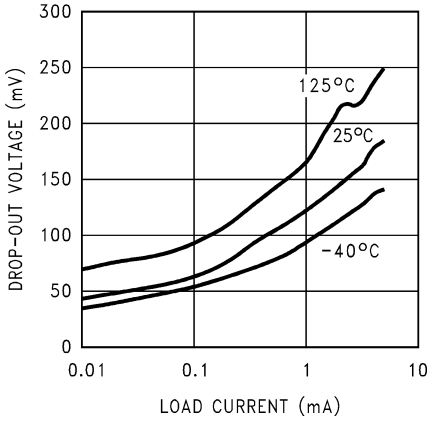

Figure 5. Dropout Voltage vs Load Current

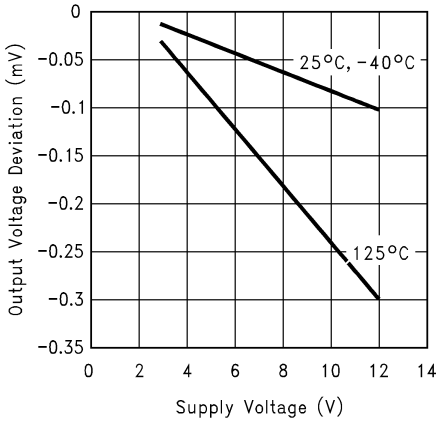

Figure 6. Line Regulation

Typical Characteristics (continued)

unless otherwise specified, V_{IN} = 3.3 V, V_{OUT} = 2.5 V, I_{LOAD} = 0, C_{OUT} = 0.022 µF, T_A = 25°C, and V_{EN} = V_{IN}

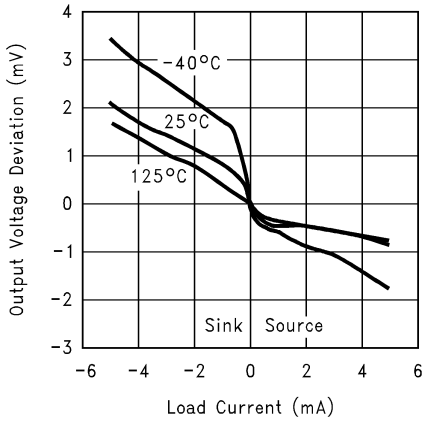

Figure 7. Load Regulation

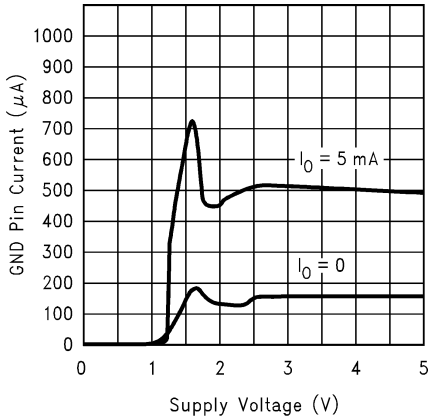

Figure 8. GND Pin Current

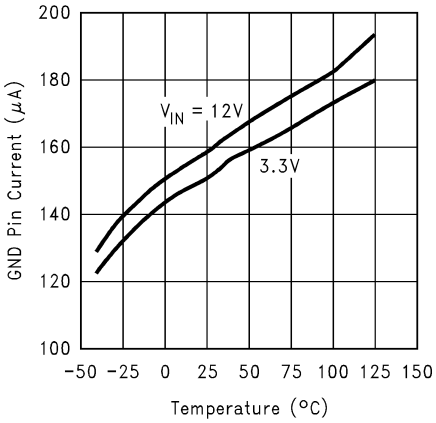

Figure 9. GND Pin Current at No Load vs Temperature

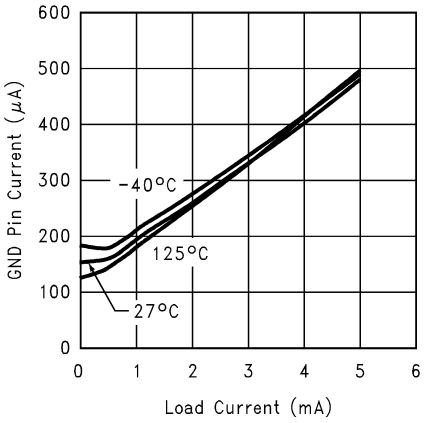

Figure 10. GND Pin Current vs Load

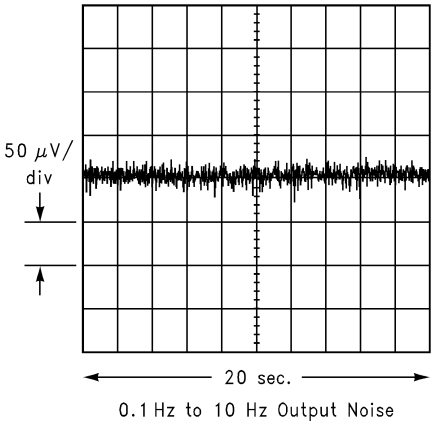

Figure 11. 0.1-Hz to 10-Hz Output Noise

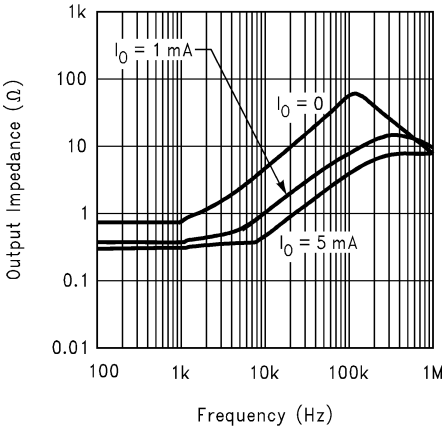

Figure 12. Output Impedance vs Frequency

Copyright © 2000–2016, Texas Instruments Incorporated

Typical Characteristics (continued)

unless otherwise specified, V_{IN} = 3.3 V, V_{OUT} = 2.5 V, I_{LOAD} = 0, C_{OUT} = 0.022 µF, T_A = 25°C, and V_{EN} = V_{IN}

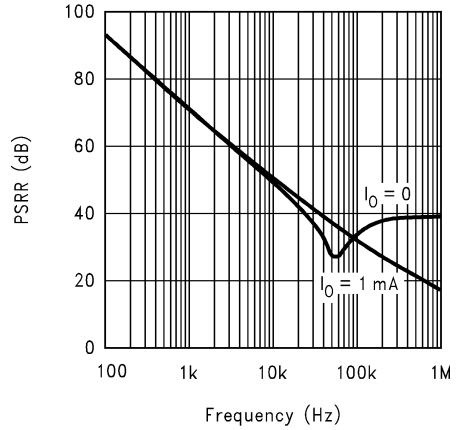

Figure 13. PSRR vs Frequency

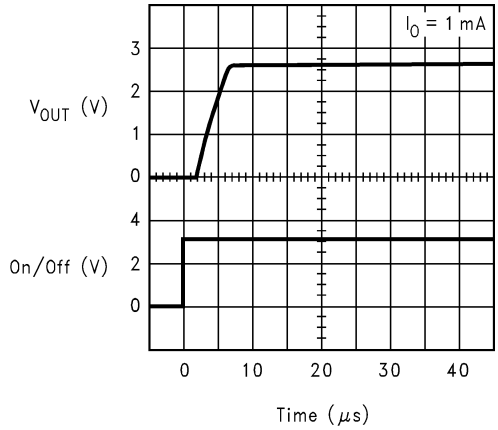

Figure 14. Enable Response

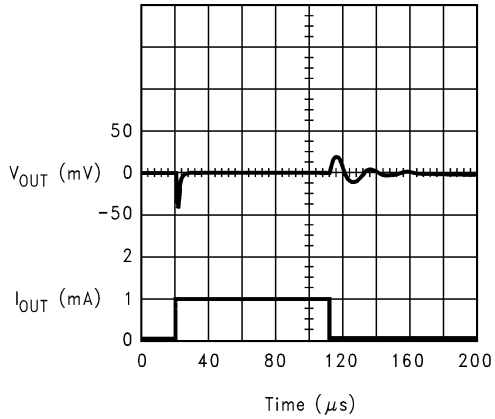

Figure 15. Load Step Response

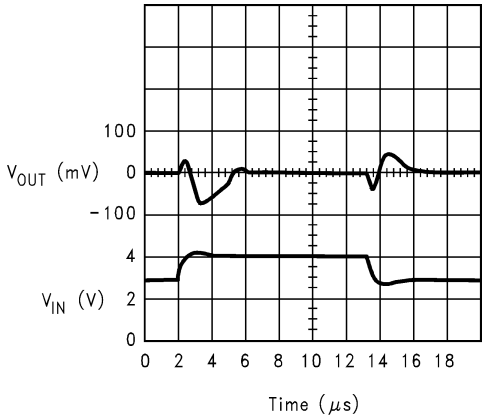

Figure 16. Line Step Response

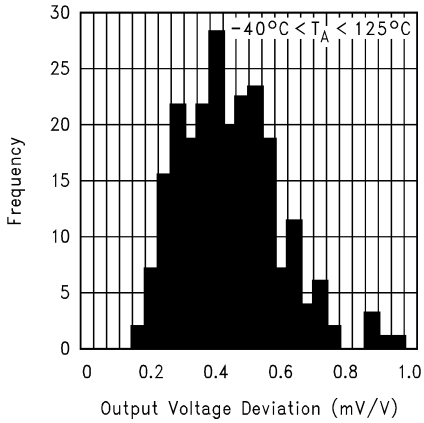

Figure 17. Thermal Hysteresis

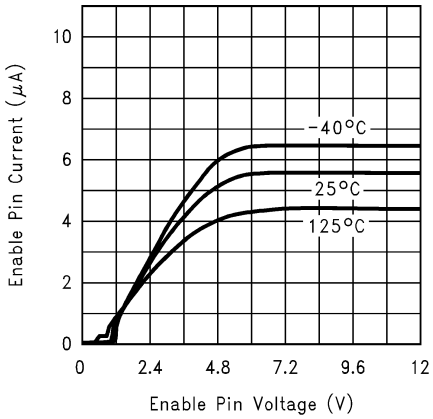

Figure 18. Enable Pin Current

7 Detailed Description

7.1 Overview

The LM4120 device is a precision bandgap voltage reference available in seven different voltage options with up to 5-mA current source and sink capability. This series reference can operate with input voltages from 2 V to 12 V while consuming 160-µA (typical) supply current. In power-down mode, device current drops to less than 2 µA. The LM4120 is available in two grades, A and Standard.

The best grade devices (A) have an initial accuracy of 0.2% with a TEMPCO of 50 ppm/°C ensured from −40°C to 125°C.

7.2 Functional Block Diagram

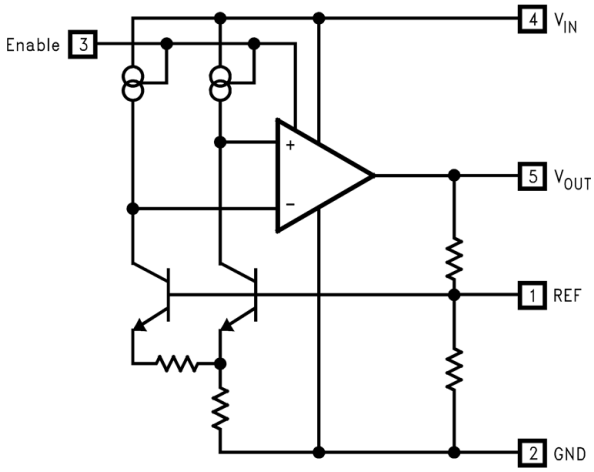

7.3 Feature Description

7.3.1 Enable

The ENABLE analog input pin with limited hysteresis generally requires 6 µA (typical) of current to start up the part. During normal operation, the Enable pin must be connected to the VIN pin. There is a minimum slew rate on this pin of about 0.003 V/µs to prevent glitches on the output. All of these conditions can easily be met with ordinary CMOS or TTL logic. The Enable pin can also be used to remotely operate the LM4120 by pulling up the Enable pin voltage to the input voltage level.

When remotely shutting down the LM4120, the Enable pin must be pulled down to the ground. Floating this pin is not recommended.

7.3.2 Reference

The REF pin must remain unconnected in all cases. The reference pin is sensitive to noise, and capacitive loading. Therefore, during the PCB layout care must be taken to keep this pin isolated as much as possible.

7.4 Device Functional Modes

Table 1 describes the functional modes of the LM4120.

Table 1. Enable Pin Mode Summary

ENABLE PIN CONNECTION	LOGIC STATE	DESCRIPTION
EN = VIN	1	Normal Operation. LM4120 starts up.
EN = GND	0	LM4120 in shutdown mode

Copyright © 2000–2016, Texas Instruments Incorporated

8 Application and Implementation

NOTE

Information in the following applications sections is not part of the TI component specification, and TI does not warrant its accuracy or completeness. TI's customers are responsible for determining suitability of components for their purposes. Customers should validate and test their design implementation to confirm system functionality.

8.1 Application Information

The standard application circuit for the LM4120 is shown in Figure 29. The device is designed to be stable with ceramic output capacitors in the range of 0.022 µF to 0.047 µF. The minimum required output capacitor is 0.022 µF. These capacitors typically have an ESR of about 0.1 Ω to 0.5 Ω. Smaller ESR can be tolerated, but larger ESR cannot be tolerated. The output capacitor can be increased to improve load transient response, up to about 1 µF. However, values above 0.047 µF must be tantalum. With tantalum capacitors in the 1-µF range, a small capacitor between the output and the reference pin is required. This capacitor will typically be in the 50-pF range. Care must be taken when using output capacitors of 1 µF or larger. These applications must be thoroughly tested over temperature, line, and load.

An input capacitor is typically not required. However, a 0.1-µF ceramic can be used to help prevent line transients from entering the LM4120. Larger input capacitors must be tantalum or aluminum.

The reference pin is sensitive to noise, and capacitive loading. Therefore, the PCB layout must isolate this pin as much as possible.

The enable pin is an analog input with very little hysteresis. About 6 µA into this pin is required to turn the part on, and it must be taken close to GND to turn the part off (see *Electrical Characteristics* for thresholds). If the shutdown feature is not required, then this pin can safely be connected directly to the input supply.

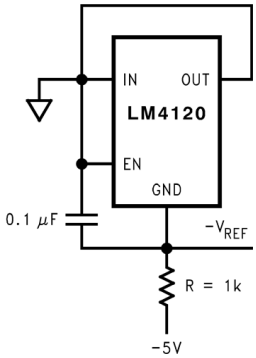

Figure 19. Voltage Reference With Negative Output Circuit

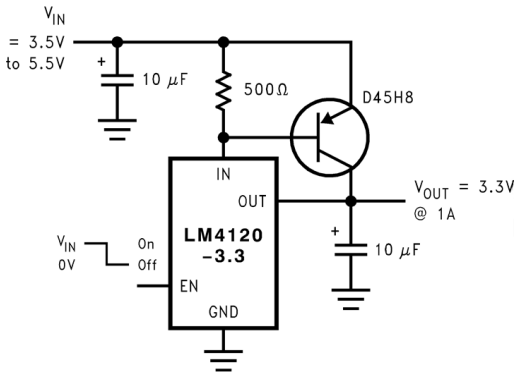

Figure 20. Precision High-Current Low-Dropout Regulator Circuit

Application Information (continued)

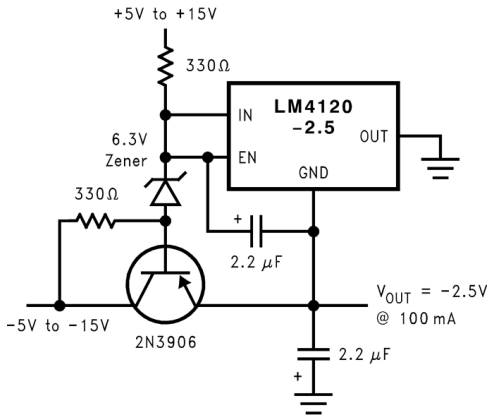

Figure 21. Precision High-Current Negative Voltage Regulator Circuit

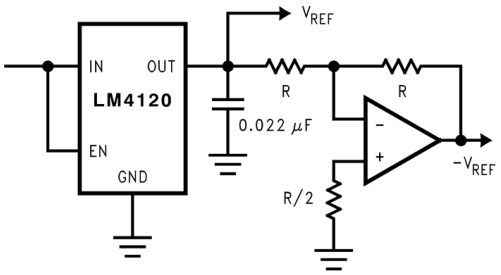

Figure 22. Voltage Reference With Complimentary Output Circuit

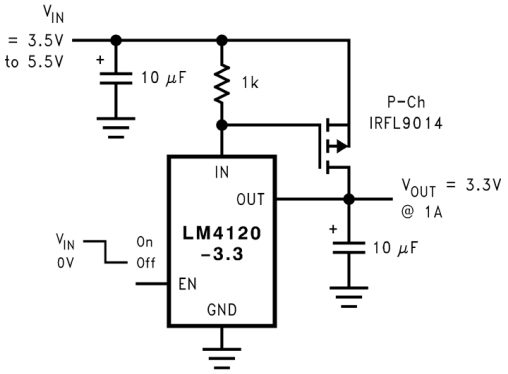

Figure 23. Precision High-Current Low-Dropout Regulator Circuit

Copyright © 2000–2016, Texas Instruments Incorporated

Application Information (continued)

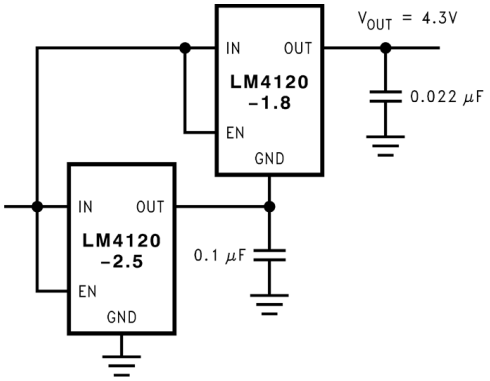

Figure 24. Stacking Voltage References Circuit

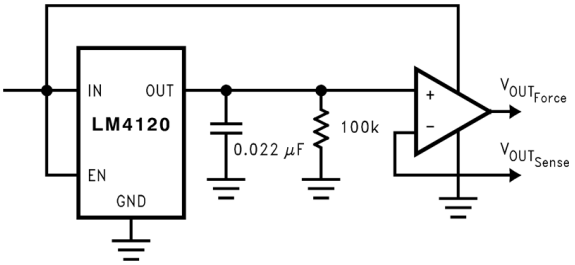

Figure 25. Precision Voltage Reference With Force and Sense Output Circuit

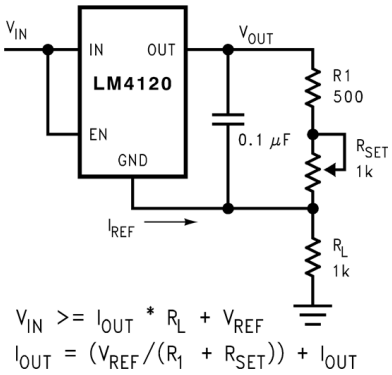

Figure 26. Programmable Current Source Circuit

Application Information (continued)

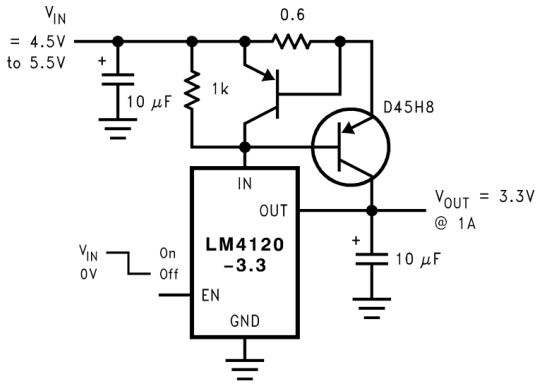

Figure 27. Precision Regulator With Current Limiting Circuit

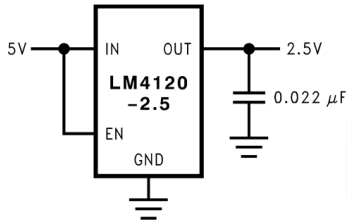

Figure 28. Power Supply Splitter Circuit

8.2 Typical Application

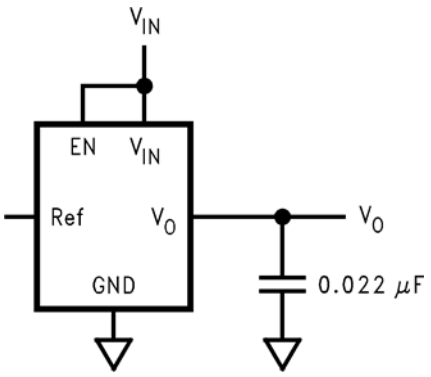

Figure 29. Standard Application Circuit

8.2.1 Design Requirements

For this design example, use the parameters listed in Table 2 as the input parameters.

Table 2. Design Parameters

PARAMETER	EXAMPLE VALUE
Output Voltage VOUT	1.8 V, 2.048 V, 2.5 V, 3 V, 3.3 V, 4.096 V, 5 V
Input Voltage Range VIN	VOUT 120 mV to 12 V
Load Current	1 mA (typical)

Copyright © 2000–2016, Texas Instruments Incorporated

8.2.2 Detailed Design Procedure

8.2.2.1 Input Capacitors

Although not always required, an input capacitor is recommended. A supply bypass capacitor on the input assures that the reference is working from a source with low impedance, which improves stability. A bypass capacitor can also improve transient response by providing a reservoir of stored energy that the reference can utilize in case where the load current demand suddenly increases. The value used for CIN may be used without limit.

8.2.2.2 Output Capacitors

The LM4120 may require a 0.022-µF to 1-µF output capacitor for loop stability (compensation) as well as transient response. During the sudden changes in load current demand, the output capacitor must source or sink current during the time it takes the control loop of the LM4120 to respond.

8.2.3 Application Curves

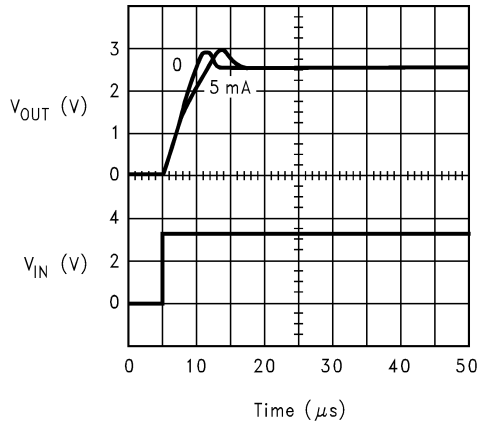

Figure 30. Start-Up Response

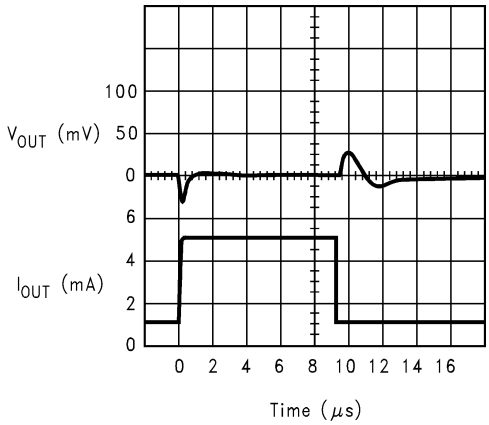

Figure 31. Load Step Response

9 Power Supply Recommendations

Noise on the power-supply input can effect the output noise, but can be reduced by using an optional bypass capacitor between the input pin and the ground. A ceramic input capacitor more than 0.1 µF or higher can be used for that purpose.

10 Layout

10.1 Layout Guidelines

The mechanical stress due to PC board mounting can cause the output voltage to shift from its initial value. The center of a PC board generally has the highest mechanical and thermal expansion stress. Mounting the device near the edges or the corners of the board where mechanical stress is at its minimum. References in SOT packages are generally less prone to assembly stress than devices in Small Outline (SOIC) package.

A mechanical isolation of the device by creating an island by cutting a U shape slot (U - SLOT) on the PCB while mounting the device helps in reducing the impact of the PC board stresses on the output voltage of the reference. This approach would also provide some thermal isolation from the rest of the circuit.

Figure 32 shows a recommended printed board layout for LM4120 along with an in-set diagram. The in-set diagram exhibits a slot cut on three sides of the reference IC, which provides a relief to the IC from external PCB stress.

10.2 Layout Example

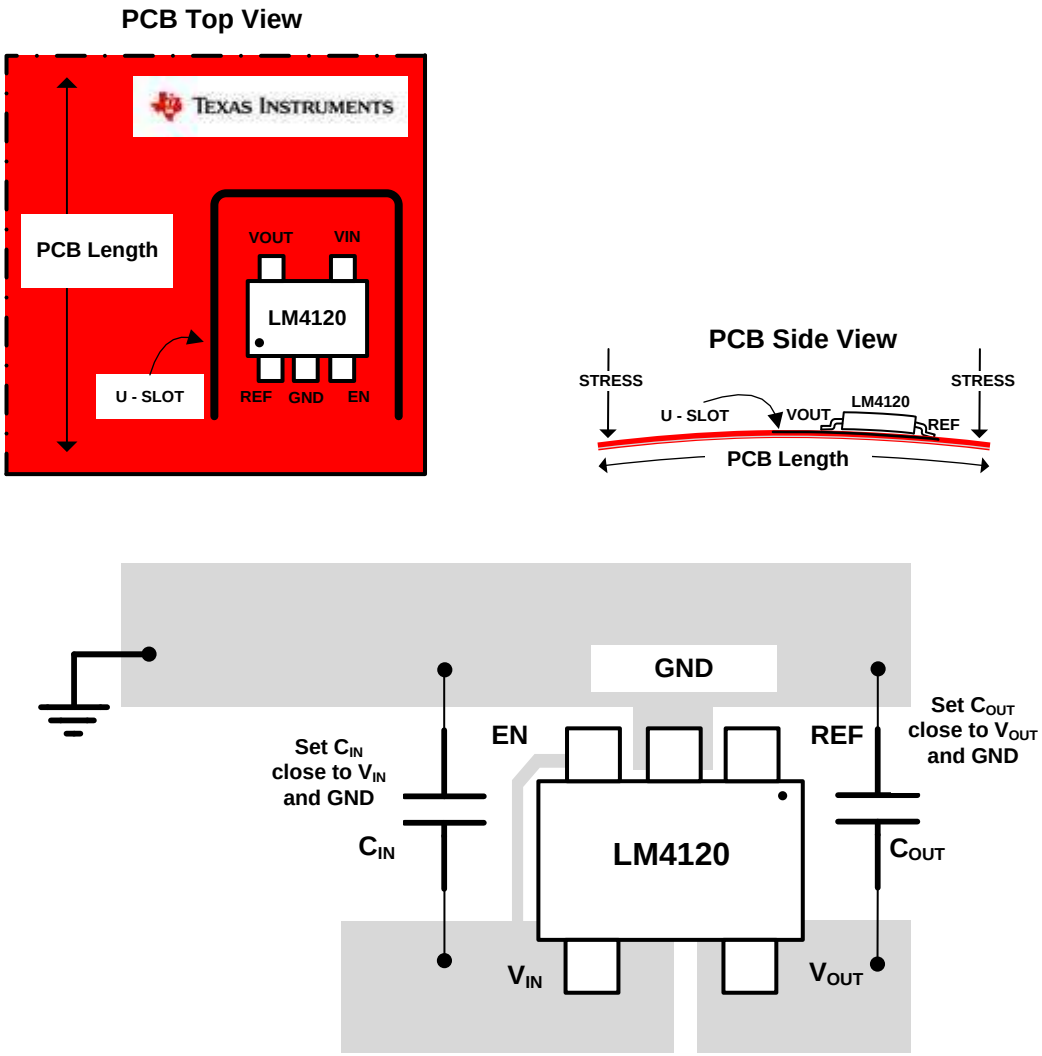

Figure 32. Typical Layout Example With LM4120

Copyright © 2000–2016, Texas Instruments Incorporated

11 Device and Documentation Support

11.1 Community Resources

The following links connect to TI community resources. Linked contents are provided "AS IS" by the respective contributors. They do not constitute TI specifications and do not necessarily reflect TI's views; see TI's Terms of Use.

TI E2E™ Online Community ***TI's Engineer-to-Engineer (E2E) Community.*** Created to foster collaboration among engineers. At e2e.ti.com, you can ask questions, share knowledge, explore ideas and help solve problems with fellow engineers.

Design Support ***TI's Design Support*** Quickly find helpful E2E forums along with design support tools and contact information for technical support.

11.2 Trademarks

E2E is a trademark of Texas Instruments.
All other trademarks are the property of their respective owners.

11.3 Electrostatic Discharge Caution

These devices have limited built-in ESD protection. The leads should be shorted together or the device placed in conductive foam during storage or handling to prevent electrostatic damage to the MOS gates.

11.4 Glossary

SLYZ022 — *TI Glossary*.

This glossary lists and explains terms, acronyms, and definitions.

12 Mechanical, Packaging, and Orderable Information

The following pages include mechanical, packaging, and orderable information. This information is the most current data available for the designated devices. This data is subject to change without notice and revision of this document. For browser-based versions of this data sheet, refer to the left-hand navigation.

PACKAGING INFORMATION

Orderable Device	Status (1)	Package Type	Package Drawing	Pins	Package Qty	Eco Plan (2)	Lead/Ball Finish (6)	MSL Peak Temp (3)	Op Temp (°C)	Device Marking (4/5)	Samples
LM4120AIM5-1.8/NOPB	ACTIVE	SOT-23	DBV	5	1000	Green (RoHS & no Sb/Br)	CU SN	Level-1-260C-UNLIM	-40 to 85	R21A	Samples
LM4120AIM5-2.0/NOPB	ACTIVE	SOT-23	DBV	5	1000	Green (RoHS & no Sb/Br)	CU SN	Level-1-260C-UNLIM	-40 to 85	R14A	Samples
LM4120AIM5-2.5	NRND	SOT-23	DBV	5	1000	TBD	Call TI	Call TI	-40 to 85	R08A	
LM4120AIM5-2.5/NOPB	ACTIVE	SOT-23	DBV	5	1000	Green (RoHS & no Sb/Br)	CU SN	Level-1-260C-UNLIM	-40 to 85	R08A	Samples
LM4120AIM5-3.0	NRND	SOT-23	DBV	5	1000	TBD	Call TI	Call TI	-40 to 85	R15A	
LM4120AIM5-3.0/NOPB	ACTIVE	SOT-23	DBV	5	1000	Green (RoHS & no Sb/Br)	CU SN	Level-1-260C-UNLIM	-40 to 85	R15A	Samples
LM4120AIM5-3.3	NRND	SOT-23	DBV	5	1000	TBD	Call TI	Call TI	-40 to 85	R16A	
LM4120AIM5-3.3/NOPB	ACTIVE	SOT-23	DBV	5	1000	Green (RoHS & no Sb/Br)	CU SN	Level-1-260C-UNLIM	-40 to 85	R16A	Samples
LM4120AIM5-4.1/NOPB	ACTIVE	SOT-23	DBV	5	1000	Green (RoHS & no Sb/Br)	CU SN	Level-1-260C-UNLIM	-40 to 85	R17A	Samples
LM4120AIM5-5.0	NRND	SOT-23	DBV	5	1000	TBD	Call TI	Call TI	-40 to 85	R18A	
LM4120AIM5-5.0/NOPB	ACTIVE	SOT-23	DBV	5	1000	Green (RoHS & no Sb/Br)	CU SN	Level-1-260C-UNLIM	-40 to 85	R18A	Samples
LM4120AIM5X-1.8/NOPB	ACTIVE	SOT-23	DBV	5	3000	Green (RoHS & no Sb/Br)	CU SN	Level-1-260C-UNLIM	-40 to 85	R21A	Samples
LM4120AIM5X-2.0/NOPB	ACTIVE	SOT-23	DBV	5	3000	Green (RoHS & no Sb/Br)	CU SN	Level-1-260C-UNLIM	-40 to 85	R14A	Samples
LM4120AIM5X-2.5/NOPB	ACTIVE	SOT-23	DBV	5	3000	Green (RoHS & no Sb/Br)	CU SN	Level-1-260C-UNLIM	-40 to 85	R08A	Samples
LM4120AIM5X-3.0/NOPB	ACTIVE	SOT-23	DBV	5	3000	Green (RoHS & no Sb/Br)	CU SN	Level-1-260C-UNLIM	-40 to 85	R15A	Samples
LM4120AIM5X-3.3/NOPB	ACTIVE	SOT-23	DBV	5	3000	Green (RoHS & no Sb/Br)	CU SN	Level-1-260C-UNLIM	-40 to 85	R16A	Samples
LM4120AIM5X-4.1	NRND	SOT-23	DBV	5	3000	TBD	Call TI	Call TI	-40 to 85	R17A	
LM4120AIM5X-4.1/NOPB	ACTIVE	SOT-23	DBV	5	3000	Green (RoHS & no Sb/Br)	CU SN	Level-1-260C-UNLIM	-40 to 85	R17A	Samples
LM4120AIM5X-5.0/NOPB	ACTIVE	SOT-23	DBV	5	3000	Green (RoHS & no Sb/Br)	CU SN	Level-1-260C-UNLIM	-40 to 85	R18A	Samples

Orderable Device	Status (1)	Package Type	Package Drawing	Pins	Package Qty	Eco Plan (2)	Lead/Ball Finish (6)	MSL Peak Temp (3)	Op Temp (°C)	Device Marking (4/5)	Samples
LM4120IM5-1.8/NOPB	ACTIVE	SOT-23	DBV	5	1000	Green (RoHS & no Sb/Br)	CU SN	Level-1-260C-UNLIM	-40 to 85	R21B	Samples
LM4120IM5-2.0/NOPB	ACTIVE	SOT-23	DBV	5	1000	Green (RoHS & no Sb/Br)	CU SN	Level-1-260C-UNLIM	-40 to 85	R14B	Samples
LM4120IM5-2.5/NOPB	ACTIVE	SOT-23	DBV	5	1000	Green (RoHS & no Sb/Br)	CU SN	Level-1-260C-UNLIM	-40 to 85	R08B	Samples
LM4120IM5-3.0	NRND	SOT-23	DBV	5	1000	TBD	Call TI	Call TI	-40 to 85	R15B	
LM4120IM5-3.0/NOPB	ACTIVE	SOT-23	DBV	5	1000	Green (RoHS & no Sb/Br)	CU SN	Level-1-260C-UNLIM	-40 to 85	R15B	Samples
LM4120IM5-3.3	NRND	SOT-23	DBV	5	1000	TBD	Call TI	Call TI	-40 to 85	R16B	
LM4120IM5-3.3/NOPB	ACTIVE	SOT-23	DBV	5	1000	Green (RoHS & no Sb/Br)	CU SN	Level-1-260C-UNLIM	-40 to 85	R16B	Samples
LM4120IM5-4.1/NOPB	ACTIVE	SOT-23	DBV	5	1000	Green (RoHS & no Sb/Br)	CU SN	Level-1-260C-UNLIM	-40 to 85	R17B	Samples
LM4120IM5-5.0/NOPB	ACTIVE	SOT-23	DBV	5	1000	Green (RoHS & no Sb/Br)	CU SN	Level-1-260C-UNLIM	-40 to 85	R18B	Samples
LM4120IM5X-1.8/NOPB	ACTIVE	SOT-23	DBV	5	3000	Green (RoHS & no Sb/Br)	CU SN	Level-1-260C-UNLIM	-40 to 85	R21B	Samples
LM4120IM5X-2.0/NOPB	ACTIVE	SOT-23	DBV	5	3000	Green (RoHS & no Sb/Br)	CU SN	Level-1-260C-UNLIM	-40 to 85	R14B	Samples
LM4120IM5X-2.5/NOPB	ACTIVE	SOT-23	DBV	5	3000	Green (RoHS & no Sb/Br)	CU SN	Level-1-260C-UNLIM	-40 to 85	R08B	Samples
LM4120IM5X-3.0/NOPB	ACTIVE	SOT-23	DBV	5	3000	Green (RoHS & no Sb/Br)	CU SN	Level-1-260C-UNLIM	-40 to 85	R15B	Samples
LM4120IM5X-3.3/NOPB	ACTIVE	SOT-23	DBV	5	3000	Green (RoHS & no Sb/Br)	CU SN	Level-1-260C-UNLIM	-40 to 85	R16B	Samples
LM4120IM5X-4.1/NOPB	ACTIVE	SOT-23	DBV	5	3000	Green (RoHS & no Sb/Br)	CU SN	Level-1-260C-UNLIM	-40 to 85	R17B	Samples
LM4120IM5X-5.0/NOPB	ACTIVE	SOT-23	DBV	5	3000	Green (RoHS & no Sb/Br)	CU SN	Level-1-260C-UNLIM	-40 to 85	R18B	Samples

(1) The marketing status values are defined as follows:
ACTIVE: Product device recommended for new designs.
LIFEBUY: TI has announced that the device will be discontinued, and a lifetime-buy period is in effect.
NRND: Not recommended for new designs. Device is in production to support existing customers, but TI does not recommend using this part in a new design.
PREVIEW: Device has been announced but is not in production. Samples may or may not be available.
OBSOLETE: TI has discontinued the production of the device.

(2) Eco Plan - The planned eco-friendly classification: Pb-Free (RoHS), Pb-Free (RoHS Exempt), or Green (RoHS & no Sb/Br) - please check http://www.ti.com/productcontent for the latest availability information and additional product content details.
TBD: The Pb-Free/Green conversion plan has not been defined.
Pb-Free (RoHS): TI's terms "Lead-Free" or "Pb-Free" mean semiconductor products that are compatible with the current RoHS requirements for all 6 substances, including the requirement that lead not exceed 0.1% by weight in homogeneous materials. Where designed to be soldered at high temperatures, TI Pb-Free products are suitable for use in specified lead-free processes.
Pb-Free (RoHS Exempt): This component has a RoHS exemption for either 1) lead-based flip-chip solder bumps used between the die and package, or 2) lead-based die adhesive used between the die and leadframe. The component is otherwise considered Pb-Free (RoHS compatible) as defined above.
Green (RoHS & no Sb/Br): TI defines "Green" to mean Pb-Free (RoHS compatible), and free of Bromine (Br) and Antimony (Sb) based flame retardants (Br or Sb do not exceed 0.1% by weight in homogeneous material)

(3) MSL, Peak Temp. - The Moisture Sensitivity Level rating according to the JEDEC industry standard classifications, and peak solder temperature.

(4) There may be additional marking, which relates to the logo, the lot trace code information, or the environmental category on the device.

(5) Multiple Device Markings will be inside parentheses. Only one Device Marking contained in parentheses and separated by a "~" will appear on a device. If a line is indented then it is a continuation of the previous line and the two combined represent the entire Device Marking for that device.

(6) Lead/Ball Finish - Orderable Devices may have multiple material finish options. Finish options are separated by a vertical ruled line. Lead/Ball Finish values may wrap to two lines if the finish value exceeds the maximum column width.

Important Information and Disclaimer: The information provided on this page represents TI's knowledge and belief as of the date that it is provided. TI bases its knowledge and belief on information provided by third parties, and makes no representation or warranty as to the accuracy of such information. Efforts are underway to better integrate information from third parties. TI has taken and continues to take reasonable steps to provide representative and accurate information but may not have conducted destructive testing or chemical analysis on incoming materials and chemicals. TI and TI suppliers consider certain information to be proprietary, and thus CAS numbers and other limited information may not be available for release.

In no event shall TI's liability arising out of such information exceed the total purchase price of the TI part(s) at issue in this document sold by TI to Customer on an annual basis.

TAPE AND REEL INFORMATION

REEL DIMENSIONS

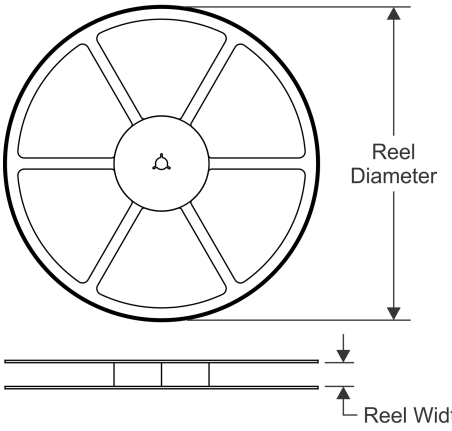

TAPE DIMENSIONS

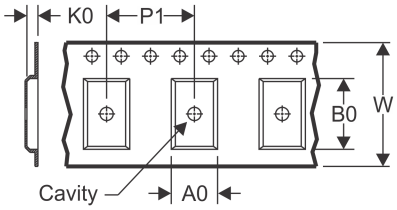

A0	Dimension designed to accommodate the component width
B0	Dimension designed to accommodate the component length
K0	Dimension designed to accommodate the component thickness
W	Overall width of the carrier tape
P1	Pitch between successive cavity centers

QUADRANT ASSIGNMENTS FOR PIN 1 ORIENTATION IN TAPE

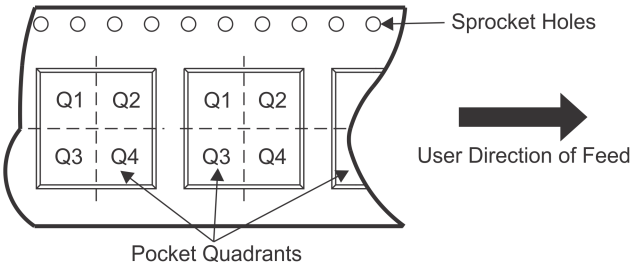

*All dimensions are nominal

Device	Package Type	Package Drawing	Pins	SPQ	Reel Diameter (mm)	Reel Width W1 (mm)	A0 (mm)	B0 (mm)	K0 (mm)	P1 (mm)	W (mm)	Pin1 Quadrant
LM4120AIM5-1.8/NOPB	SOT-23	DBV	5	1000	178.0	8.4	3.2	3.2	1.4	4.0	8.0	Q3
LM4120AIM5-2.0/NOPB	SOT-23	DBV	5	1000	178.0	8.4	3.2	3.2	1.4	4.0	8.0	Q3
LM4120AIM5-2.5	SOT-23	DBV	5	1000	178.0	8.4	3.2	3.2	1.4	4.0	8.0	Q3
LM4120AIM5-2.5/NOPB	SOT-23	DBV	5	1000	178.0	8.4	3.2	3.2	1.4	4.0	8.0	Q3
LM4120AIM5-3.0	SOT-23	DBV	5	1000	178.0	8.4	3.2	3.2	1.4	4.0	8.0	Q3
LM4120AIM5-3.0/NOPB	SOT-23	DBV	5	1000	178.0	8.4	3.2	3.2	1.4	4.0	8.0	Q3
LM4120AIM5-3.3	SOT-23	DBV	5	1000	178.0	8.4	3.2	3.2	1.4	4.0	8.0	Q3
LM4120AIM5-3.3/NOPB	SOT-23	DBV	5	1000	178.0	8.4	3.2	3.2	1.4	4.0	8.0	Q3
LM4120AIM5-4.1/NOPB	SOT-23	DBV	5	1000	178.0	8.4	3.2	3.2	1.4	4.0	8.0	Q3
LM4120AIM5-5.0	SOT-23	DBV	5	1000	178.0	8.4	3.2	3.2	1.4	4.0	8.0	Q3
LM4120AIM5-5.0/NOPB	SOT-23	DBV	5	1000	178.0	8.4	3.2	3.2	1.4	4.0	8.0	Q3
LM4120AIM5X-1.8/NOPB	SOT-23	DBV	5	3000	178.0	8.4	3.2	3.2	1.4	4.0	8.0	Q3
LM4120AIM5X-2.0/NOPB	SOT-23	DBV	5	3000	178.0	8.4	3.2	3.2	1.4	4.0	8.0	Q3
LM4120AIM5X-2.5/NOPB	SOT-23	DBV	5	3000	178.0	8.4	3.2	3.2	1.4	4.0	8.0	Q3
LM4120AIM5X-3.0/NOPB	SOT-23	DBV	5	3000	178.0	8.4	3.2	3.2	1.4	4.0	8.0	Q3
LM4120AIM5X-3.3/NOPB	SOT-23	DBV	5	3000	178.0	8.4	3.2	3.2	1.4	4.0	8.0	Q3
LM4120AIM5X-4.1	SOT-23	DBV	5	3000	178.0	8.4	3.2	3.2	1.4	4.0	8.0	Q3
LM4120AIM5X-4.1/NOPB	SOT-23	DBV	5	3000	178.0	8.4	3.2	3.2	1.4	4.0	8.0	Q3

Device	Package Type	Package Drawing	Pins	SPQ	Reel Diameter (mm)	Reel Width W1 (mm)	A0 (mm)	B0 (mm)	K0 (mm)	P1 (mm)	W (mm)	Pin1 Quadrant
LM4120AIM5X-5.0/NOPB	SOT-23	DBV	5	3000	178.0	8.4	3.2	3.2	1.4	4.0	8.0	Q3
LM4120IM5-1.8/NOPB	SOT-23	DBV	5	1000	178.0	8.4	3.2	3.2	1.4	4.0	8.0	Q3
LM4120IM5-2.0/NOPB	SOT-23	DBV	5	1000	178.0	8.4	3.2	3.2	1.4	4.0	8.0	Q3
LM4120IM5-2.5/NOPB	SOT-23	DBV	5	1000	178.0	8.4	3.2	3.2	1.4	4.0	8.0	Q3
LM4120IM5-3.0	SOT-23	DBV	5	1000	178.0	8.4	3.2	3.2	1.4	4.0	8.0	Q3
LM4120IM5-3.0/NOPB	SOT-23	DBV	5	1000	178.0	8.4	3.2	3.2	1.4	4.0	8.0	Q3
LM4120IM5-3.3	SOT-23	DBV	5	1000	178.0	8.4	3.2	3.2	1.4	4.0	8.0	Q3
LM4120IM5-3.3/NOPB	SOT-23	DBV	5	1000	178.0	8.4	3.2	3.2	1.4	4.0	8.0	Q3
LM4120IM5-4.1/NOPB	SOT-23	DBV	5	1000	178.0	8.4	3.2	3.2	1.4	4.0	8.0	Q3
LM4120IM5-5.0/NOPB	SOT-23	DBV	5	1000	178.0	8.4	3.2	3.2	1.4	4.0	8.0	Q3
LM4120IM5X-1.8/NOPB	SOT-23	DBV	5	3000	178.0	8.4	3.2	3.2	1.4	4.0	8.0	Q3
LM4120IM5X-2.0/NOPB	SOT-23	DBV	5	3000	178.0	8.4	3.2	3.2	1.4	4.0	8.0	Q3
LM4120IM5X-2.5/NOPB	SOT-23	DBV	5	3000	178.0	8.4	3.2	3.2	1.4	4.0	8.0	Q3
LM4120IM5X-3.0/NOPB	SOT-23	DBV	5	3000	178.0	8.4	3.2	3.2	1.4	4.0	8.0	Q3
LM4120IM5X-3.3/NOPB	SOT-23	DBV	5	3000	178.0	8.4	3.2	3.2	1.4	4.0	8.0	Q3
LM4120IM5X-4.1/NOPB	SOT-23	DBV	5	3000	178.0	8.4	3.2	3.2	1.4	4.0	8.0	Q3
LM4120IM5X-5.0/NOPB	SOT-23	DBV	5	3000	178.0	8.4	3.2	3.2	1.4	4.0	8.0	Q3

TAPE AND REEL BOX DIMENSIONS

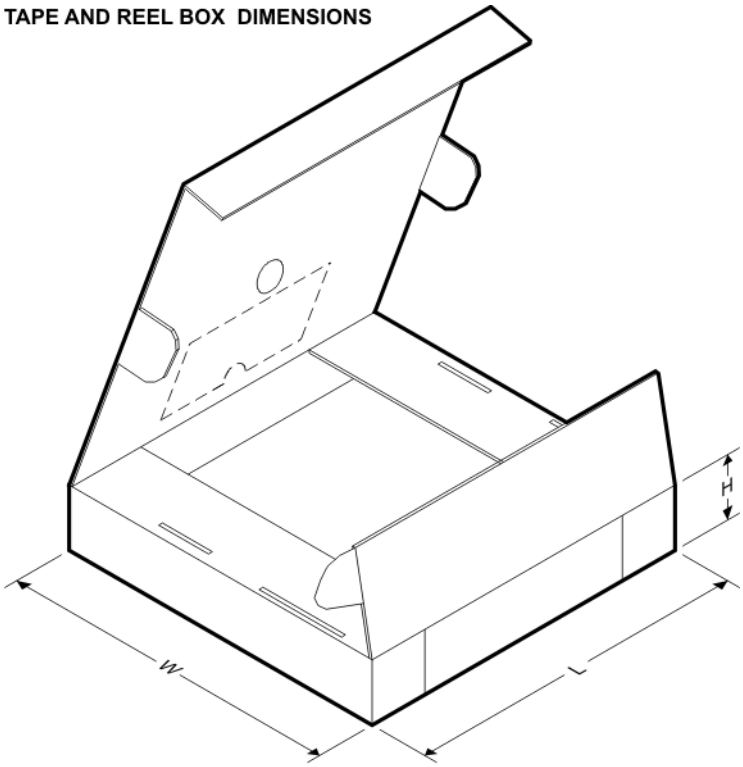

*All dimensions are nominal

Device	Package Type	Package Drawing	Pins	SPQ	Length (mm)	Width (mm)	Height (mm)
LM4120AIM5-1.8/NOPB	SOT-23	DBV	5	1000	210.0	185.0	35.0
LM4120AIM5-2.0/NOPB	SOT-23	DBV	5	1000	210.0	185.0	35.0
LM4120AIM5-2.5	SOT-23	DBV	5	1000	210.0	185.0	35.0
LM4120AIM5-2.5/NOPB	SOT-23	DBV	5	1000	210.0	185.0	35.0
LM4120AIM5-3.0	SOT-23	DBV	5	1000	210.0	185.0	35.0
LM4120AIM5-3.0/NOPB	SOT-23	DBV	5	1000	210.0	185.0	35.0
LM4120AIM5-3.3	SOT-23	DBV	5	1000	210.0	185.0	35.0
LM4120AIM5-3.3/NOPB	SOT-23	DBV	5	1000	210.0	185.0	35.0
LM4120AIM5-4.1/NOPB	SOT-23	DBV	5	1000	210.0	185.0	35.0
LM4120AIM5-5.0	SOT-23	DBV	5	1000	210.0	185.0	35.0
LM4120AIM5-5.0/NOPB	SOT-23	DBV	5	1000	210.0	185.0	35.0
LM4120AIM5X-1.8/NOPB	SOT-23	DBV	5	3000	210.0	185.0	35.0
LM4120AIM5X-2.0/NOPB	SOT-23	DBV	5	3000	210.0	185.0	35.0
LM4120AIM5X-2.5/NOPB	SOT-23	DBV	5	3000	210.0	185.0	35.0
LM4120AIM5X-3.0/NOPB	SOT-23	DBV	5	3000	210.0	185.0	35.0
LM4120AIM5X-3.3/NOPB	SOT-23	DBV	5	3000	210.0	185.0	35.0
LM4120AIM5X-4.1	SOT-23	DBV	5	3000	210.0	185.0	35.0
LM4120AIM5X-4.1/NOPB	SOT-23	DBV	5	3000	210.0	185.0	35.0
LM4120AIM5X-5.0/NOPB	SOT-23	DBV	5	3000	210.0	185.0	35.0
LM4120IM5-1.8/NOPB	SOT-23	DBV	5	1000	210.0	185.0	35.0
LM4120IM5-2.0/NOPB	SOT-23	DBV	5	1000	210.0	185.0	35.0
LM4120IM5-2.5/NOPB	SOT-23	DBV	5	1000	210.0	185.0	35.0
LM4120IM5-3.0	SOT-23	DBV	5	1000	210.0	185.0	35.0
LM4120IM5-3.0/NOPB	SOT-23	DBV	5	1000	210.0	185.0	35.0
LM4120IM5-3.3	SOT-23	DBV	5	1000	210.0	185.0	35.0
LM4120IM5-3.3/NOPB	SOT-23	DBV	5	1000	210.0	185.0	35.0
LM4120IM5-4.1/NOPB	SOT-23	DBV	5	1000	210.0	185.0	35.0
LM4120IM5-5.0/NOPB	SOT-23	DBV	5	1000	210.0	185.0	35.0
LM4120IM5X-1.8/NOPB	SOT-23	DBV	5	3000	210.0	185.0	35.0
LM4120IM5X-2.0/NOPB	SOT-23	DBV	5	3000	210.0	185.0	35.0
LM4120IM5X-2.5/NOPB	SOT-23	DBV	5	3000	210.0	185.0	35.0
LM4120IM5X-3.0/NOPB	SOT-23	DBV	5	3000	210.0	185.0	35.0
LM4120IM5X-3.3/NOPB	SOT-23	DBV	5	3000	210.0	185.0	35.0
LM4120IM5X-4.1/NOPB	SOT-23	DBV	5	3000	210.0	185.0	35.0
LM4120IM5X-5.0/NOPB	SOT-23	DBV	5	3000	210.0	185.0	35.0

DBV (R–PDSO–G5) PLASTIC SMALL–OUTLINE PACKAGE

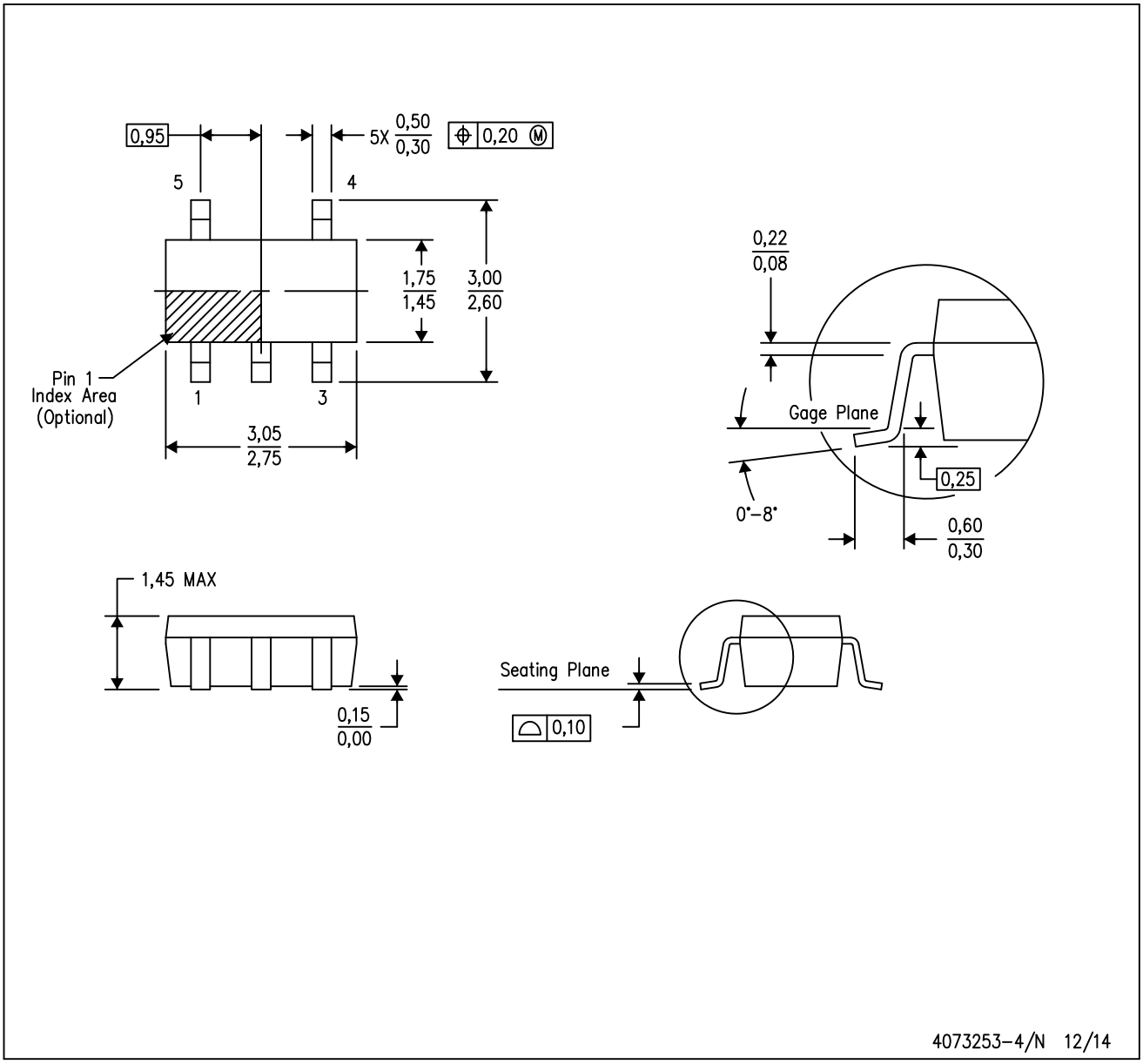

NOTES:
A. All linear dimensions are in millimeters.
B. This drawing is subject to change without notice.
C. Body dimensions do not include mold flash or protrusion. Mold flash and protrusion shall not exceed 0.15 per side.
D. Falls within JEDEC MO–178 Variation AA.

DBV (R-PDSO-G5) PLASTIC SMALL OUTLINE

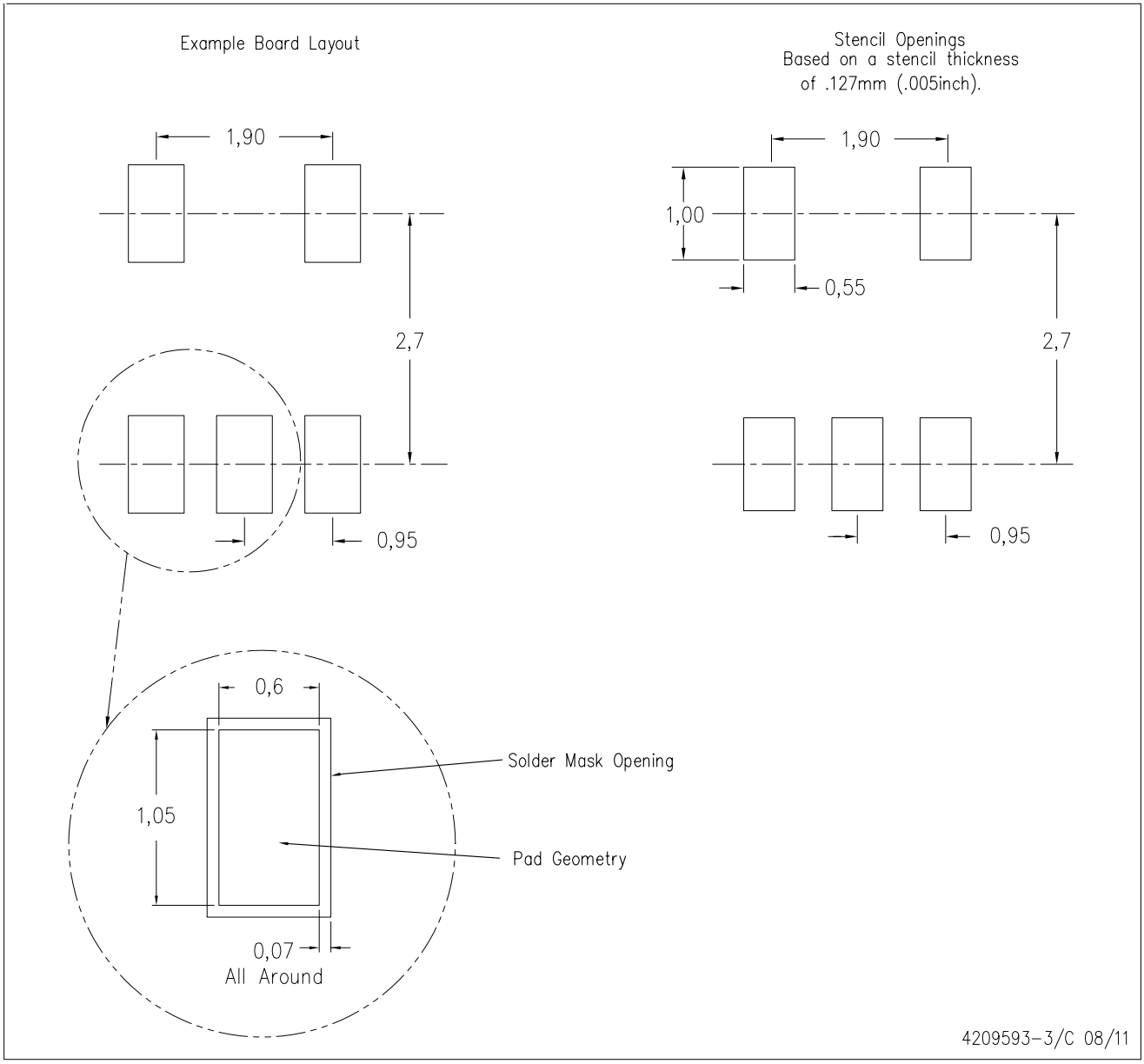

NOTES:
A. All linear dimensions are in millimeters.
B. This drawing is subject to change without notice.
C. Customers should place a note on the circuit board fabrication drawing not to alter the center solder mask defined pad.
D. Publication IPC-7351 is recommended for alternate designs.
E. Laser cutting apertures with trapezoidal walls and also rounding corners will offer better paste release. Customers should contact their board assembly site for stencil design recommendations. Example stencil design based on a 50% volumetric metal load solder paste. Refer to IPC-7525 for other stencil recommendations.

IMPORTANT NOTICE

Texas Instruments Incorporated and its subsidiaries (TI) reserve the right to make corrections, enhancements, improvements and other changes to its semiconductor products and services per JESD46, latest issue, and to discontinue any product or service per JESD48, latest issue. Buyers should obtain the latest relevant information before placing orders and should verify that such information is current and complete. All semiconductor products (also referred to herein as “components”) are sold subject to TI’s terms and conditions of sale supplied at the time of order acknowledgment.

TI warrants performance of its components to the specifications applicable at the time of sale, in accordance with the warranty in TI’s terms and conditions of sale of semiconductor products. Testing and other quality control techniques are used to the extent TI deems necessary to support this warranty. Except where mandated by applicable law, testing of all parameters of each component is not necessarily performed.

TI assumes no liability for applications assistance or the design of Buyers’ products. Buyers are responsible for their products and applications using TI components. To minimize the risks associated with Buyers’ products and applications, Buyers should provide adequate design and operating safeguards.

TI does not warrant or represent that any license, either express or implied, is granted under any patent right, copyright, mask work right, or other intellectual property right relating to any combination, machine, or process in which TI components or services are used. Information published by TI regarding third-party products or services does not constitute a license to use such products or services or a warranty or endorsement thereof. Use of such information may require a license from a third party under the patents or other intellectual property of the third party, or a license from TI under the patents or other intellectual property of TI.

Reproduction of significant portions of TI information in TI data books or data sheets is permissible only if reproduction is without alteration and is accompanied by all associated warranties, conditions, limitations, and notices. TI is not responsible or liable for such altered documentation. Information of third parties may be subject to additional restrictions.

Resale of TI components or services with statements different from or beyond the parameters stated by TI for that component or service voids all express and any implied warranties for the associated TI component or service and is an unfair and deceptive business practice. TI is not responsible or liable for any such statements.

Buyer acknowledges and agrees that it is solely responsible for compliance with all legal, regulatory and safety-related requirements concerning its products, and any use of TI components in its applications, notwithstanding any applications-related information or support that may be provided by TI. Buyer represents and agrees that it has all the necessary expertise to create and implement safeguards which anticipate dangerous consequences of failures, monitor failures and their consequences, lessen the likelihood of failures that might cause harm and take appropriate remedial actions. Buyer will fully indemnify TI and its representatives against any damages arising out of the use of any TI components in safety-critical applications.

In some cases, TI components may be promoted specifically to facilitate safety-related applications. With such components, TI’s goal is to help enable customers to design and create their own end-product solutions that meet applicable functional safety standards and requirements. Nonetheless, such components are subject to these terms.

No TI components are authorized for use in FDA Class III (or similar life-critical medical equipment) unless authorized officers of the parties have executed a special agreement specifically governing such use.

Only those TI components which TI has specifically designated as military grade or “enhanced plastic” are designed and intended for use in military/aerospace applications or environments. Buyer acknowledges and agrees that any military or aerospace use of TI components which have ***not*** been so designated is solely at the Buyer's risk, and that Buyer is solely responsible for compliance with all legal and regulatory requirements in connection with such use.

TI has specifically designated certain components as meeting ISO/TS16949 requirements, mainly for automotive use. In any case of use of non-designated products, TI will not be responsible for any failure to meet ISO/TS16949.

Products		**Applications**	
Audio	www.ti.com/audio	Automotive and Transportation	www.ti.com/automotive
Amplifiers	amplifier.ti.com	Communications and Telecom	www.ti.com/communications
Data Converters	dataconverter.ti.com	Computers and Peripherals	www.ti.com/computers
DLP® Products	www.dlp.com	Consumer Electronics	www.ti.com/consumer-apps
DSP	dsp.ti.com	Energy and Lighting	www.ti.com/energy
Clocks and Timers	www.ti.com/clocks	Industrial	www.ti.com/industrial
Interface	interface.ti.com	Medical	www.ti.com/medical
Logic	logic.ti.com	Security	www.ti.com/security
Power Mgmt	power.ti.com	Space, Avionics and Defense	www.ti.com/space-avionics-defense
Microcontrollers	microcontroller.ti.com	Video and Imaging	www.ti.com/video
RFID	www.ti-rfid.com		
OMAP Applications Processors	www.ti.com/omap	**TI E2E Community**	e2e.ti.com
Wireless Connectivity	www.ti.com/wirelessconnectivity		

Mailing Address: Texas Instruments, Post Office Box 655303, Dallas, Texas 75265
Copyright © 2016, Texas Instruments Incorporated